Chapter MK:V

V. Diagnoseansätze

©STEIN 2023

Diagnosis Setting

Technical Terms (recapitulation)

- System.
  Clipping of the real world.
- Symptom.
  Observation that is different from the prediction, and which is caused by a system fault.
- Diagnosis I (result view).
  Set of components whose malfunction ($\approx$ set of states) can explain all symptoms.
- Diagnosis II (process view).
  Identification of the components of the system that behave faulty.
- Hypothesis.
  Diagnosis candidate; possible diagnosis (in terms of I).

- Conflict.
  A set of components underlying a symptom. I. e., a set of components that cannot be working correctly at the same time.

©STEIN 2023

Diagnosis Setting

Modeling

How much do we know about the broken system?

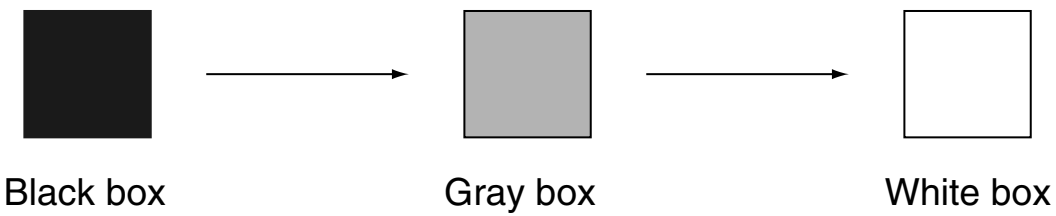

If we know sufficiently deep cause-effect relations, a model of “first principles” can be constructed.

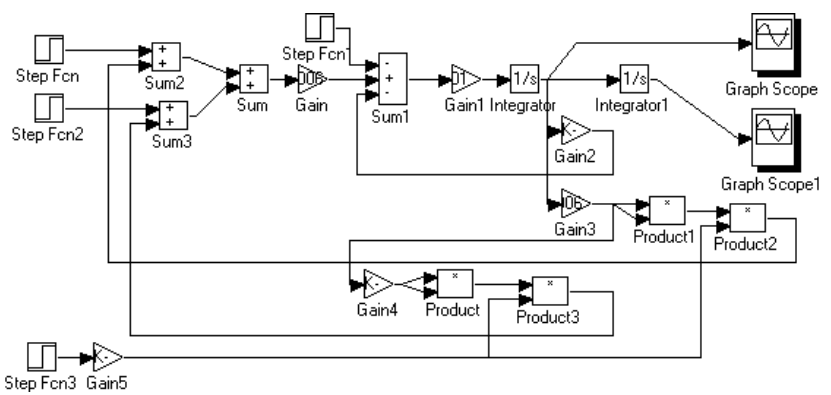

Modeling techniques for first-principles-models:

physical behavior equations, block diagrams, propositional logics, etc.

©STEIN 2023

Diagnosis Setting

Model-based Diagnosis Example

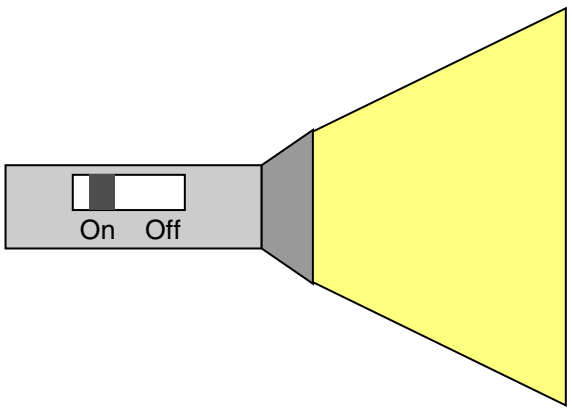

Expected behavior

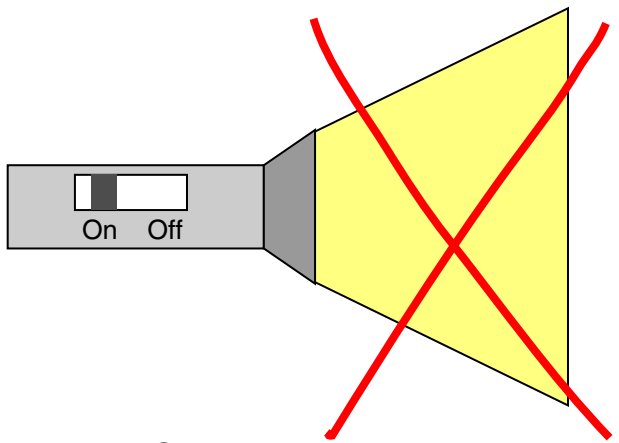

Observed behavior

Observation: System does not work as expected.

Associative diagnosis: $\texttt{No\_light} \longrightarrow \texttt{Battery\_empty}$

Statistical diagnosis: $P(\texttt{Battery\_empty} \mid \texttt{No\_light}) = 0.7$

©STEIN 2023

Diagnosis Setting

Model-based Diagnosis Example (continued)

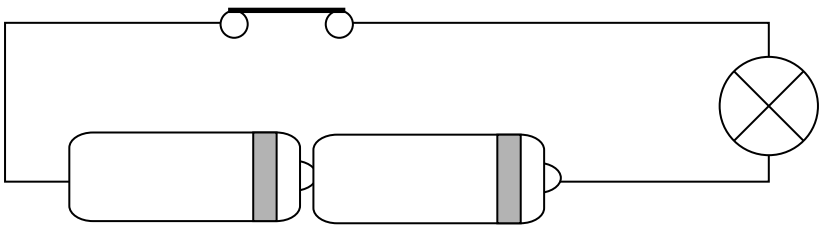

Observation: System does not work as expected.

Model-based diagnosis: $(\neg \texttt{B\_empty} \wedge \neg \texttt{L\_defect} \wedge \texttt{S\_closed}) \rightarrow \texttt{FL\_shines}$

Atom	Semantics
`B_empty`	Battery is empty.
`L_defect`	Light bulb is defect.
`S_closed`	Switch is closed.
`FL_shines`	Flashlight shines.

A model-based diagnosis can be realized in different ways:

- Remove all components and check them individually.
- Hypothesize faults which explain the observed behavior: what-if analysis

©STEIN 2023

Chapter MK:V

V. Diagnoseansätze

©STEIN 2023

Diagnosis with the GDE

The most well-known model-based diagnosis approach is the quantitative, analytical diagnosis according to the GDE, the “General Diagnostic Engine”.

Generic mechanism of the GDE [deKleer/Forbus 1987-1993]:

1. O.K.-behavior models are given for all components of a system.
2. The system description, *SD*, is formed from component models.
3. Inference engine: *SD* + O.K.-assumptions $\Rightarrow$ simulated behavior.
4. If simulated behavior $\neq$ observed behavior
   then retract some O.K.-assumptions.
5. Goto 3 until simulated behavior $=$ observed behavior.

Jobs of the ATMS in connection with the GDE:

- maintain multiple hypotheses simultaneously
- switch among hypotheses
- compare hypotheses

©STEIN 2023

Diagnosis with the GDE

Reasoning in the Polybox Example

The diagnosis task is initiated because of some discrepancy between an observation and an expectation.

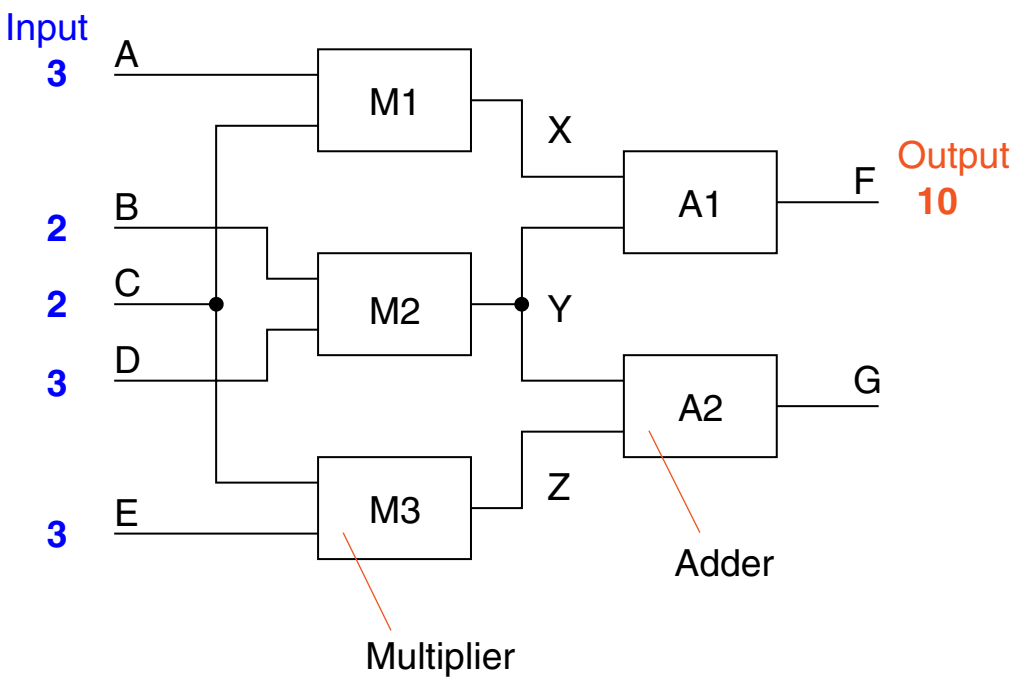

First observation: Output F has been measured to be 10.

Question: Is $F = 10$ a symptom?

©STEIN 2023

Remarks:

- At least one of $M1$, $M2$, $A1$ must be faulted to *explain* $F = 10$.
- $\{M1, M2, A1\}$ is a conflict.
- Here, $\{M1\}, \{M2\}$, and $\{A1\}$ are diagnoses, minimal diagnoses.

©STEIN 2023

Diagnosis with the GDE

Conflicts in Model-based Diagnosis

A conflict arises because of an over-determinism in the system description:

1. A value is given (= observed) for some variable x in some constraint.
2. A value for x can also be computed by simulating the model.

➜ x is over-determined.

Solution of the over-determinism:

Eliminate some constraint of the system description such that x cannot be computed any longer.

➜ The model M_c of component c from which an equation is eliminated gets a degree of freedom in its behavior.

➜ Based on M_c some arbitrary behavior is allowed for c.

➜ c complies ($\equiv$ could produce) the observed value.

Put another way: The component c behaves faulty, i. e., c is the diagnosis.

©STEIN 2023

Diagnosis with the GDE

Reasoning in the Polybox Example (continued)

To discriminate among the diagnoses we need more observations.

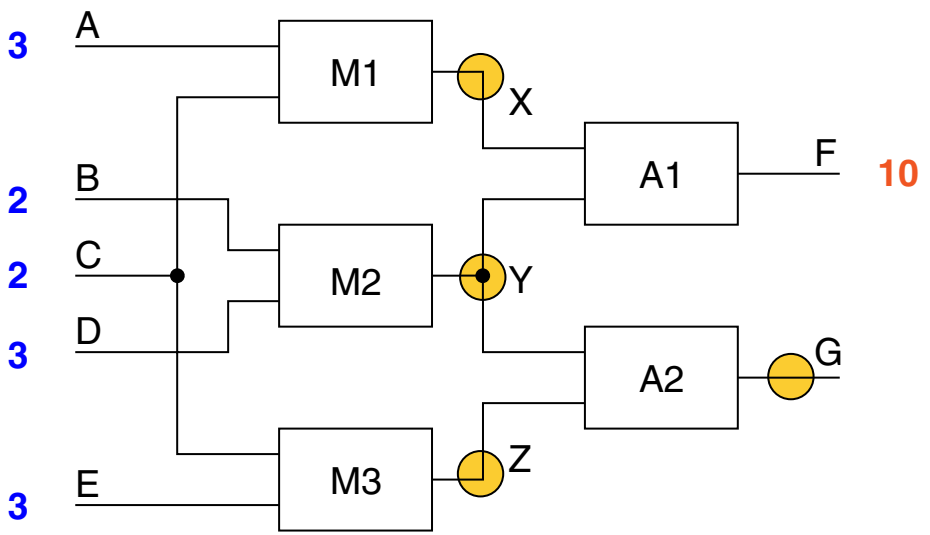

Question: Where shall be measured next?

©STEIN 2023

Diagnosis with the GDE

Reasoning in the Polybox Example (continued)

To discriminate among the diagnoses we need more observations.

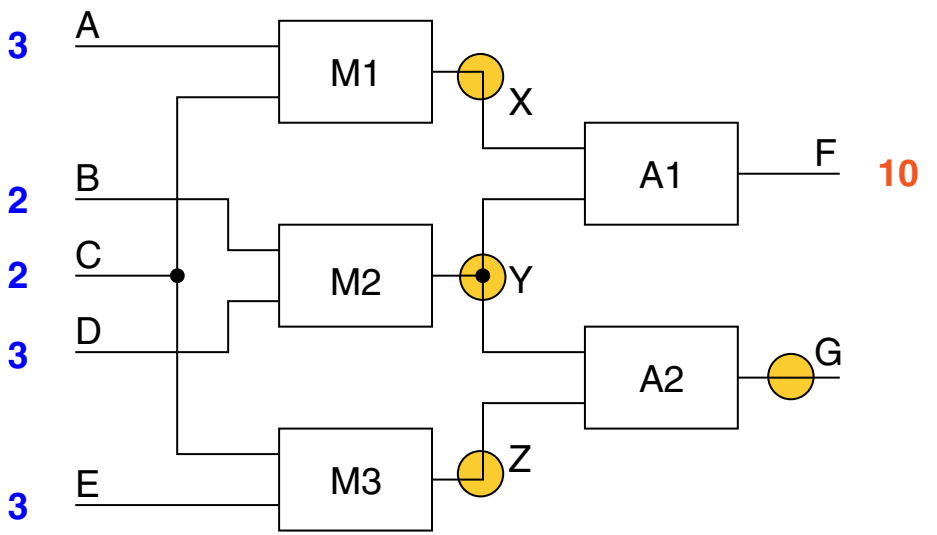

Question: Where shall be measured next?

Analyze possible measurement results (outcomes) and rank the alternatives:

1. Z is bad (no information about any of $M1, M2$, or $A1$).
2. X is better ($M1$ or $A1$ or both are eliminated as candidates).
3. Y similar to X (elimination of $M2$ or $A1$ or both).
4. G is best (additional weak information about $A2$ and $M3$).

©STEIN 2023

Diagnosis with the GDE

Reasoning in the Polybox Example (continued)

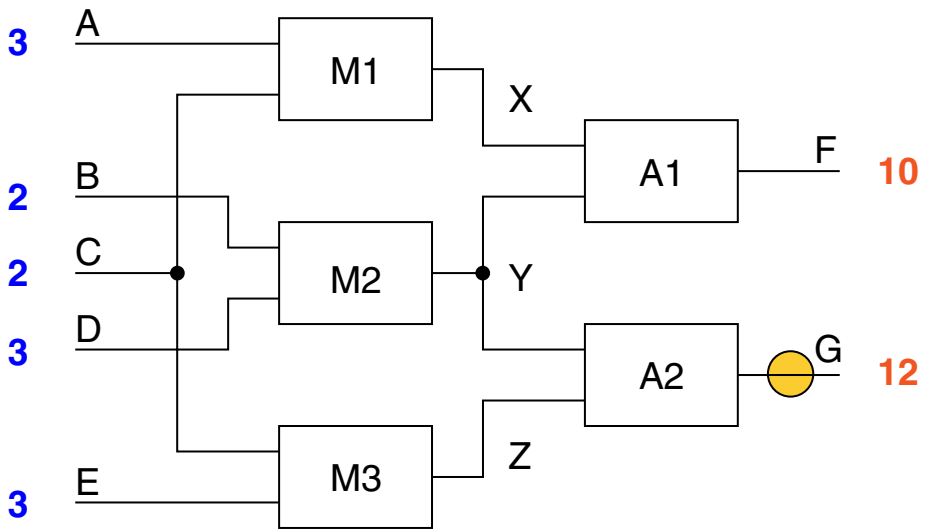

Second observation: Output G has been measured to be 12.

Question: Is $G = 12$ a symptom?

Superficial analysis:

- $M2$ O.K.: $B = 2 \wedge D = 3 \rightarrow Y = 6$
- $M3$ O.K.: $C = 2 \wedge E = 3 \rightarrow Z = 6$
- $A2$ O.K.: $Y = 6 \wedge Z = 6 \rightarrow G = 12 \;\Rightarrow\; G$ is not a symptom.

©STEIN 2023

Remarks:

- This does not guarantee that $M2, A2$, and $M3$ are unfaulted. E. g., $M3$ could add 1 and $A2$ could subtract 1 from their output.

© STEIN 2023

Diagnosis with the GDE

Reasoning in the Polybox Example (continued)

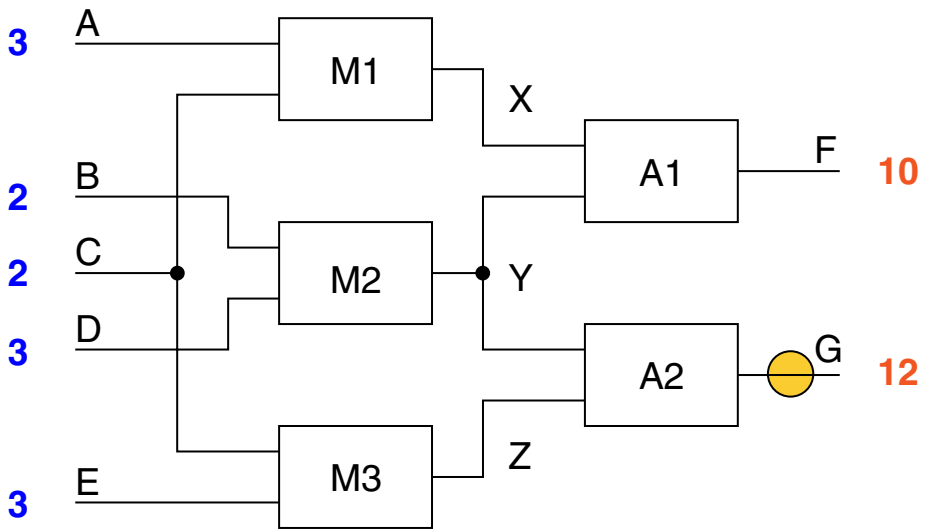

Second observation: Output G has been measured to be 12.

Question: Is $G = 12$ a symptom?

A more in-depth analysis—consider diagnosis $\{M2\}$:

- Y must be 4 to ensure observation $F = 10$.
- If $Y = 4$ then G must be 10 $\Rightarrow$ G is a symptom.

©STEIN 2023

Diagnosis with the GDE

Reasoning in the Polybox Example (continued)

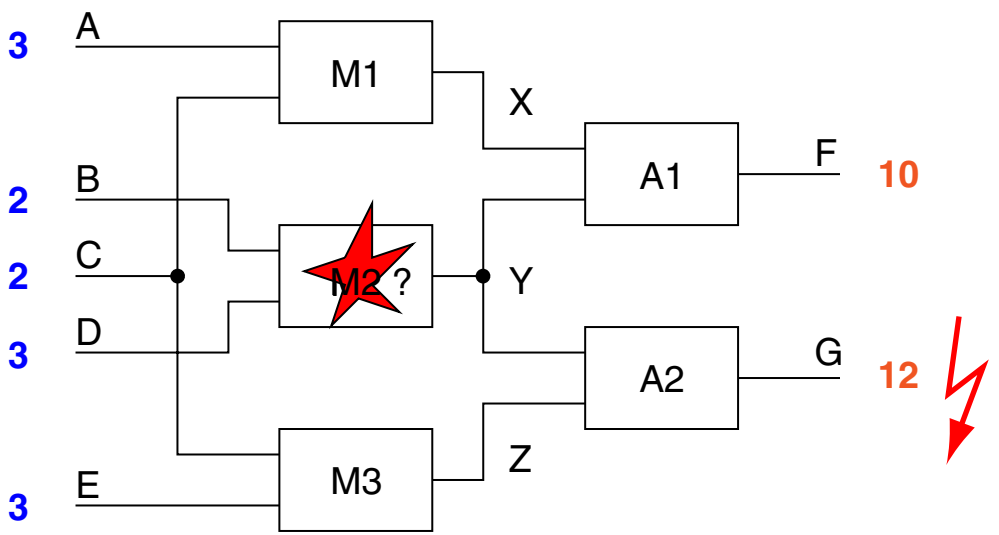

If $M1, A1, A2$, and $M3$ are working correctly, and given the inputs and observations, then G should be 10.

- ➜ $\{M2\}$ is no (longer) a minimal diagnosis.
- ➜ Two additional minimal diagnoses: $\{M2, A2\}, \{M2, M3\}$

Explanation:

- There are two conflicts: $\{M1, A1, M2\}$ and $\{M1, A1, A2, M3\}$
- A diagnosis must cover all conflicts.

©STEIN 2023

Diagnosis with the GDE

Polybox Example + ATMS

Domain constraints (inference engine):

```
(primitive-constraint adder (a1 a2 sum)
  (formulae (sum (a1 a2) (+ a1 a2))
       (a1 (sum a2) (- sum a2))
       (a2 (sum a1) (- sum a1))))

(primitive-constraint multiplier (m1 m2 product)
  (formulae (product (m1 m2) (* m1 m2))
       ...))
```

Constraint net definition (inference engine):

```
(constraint-net polybox (a b c d e x y z f g)
  (m1 multiplier a c x)
  (m2 multiplier b d y)
  ...)
```

Tell about observations (user):

```
(set-parameter (polybox a) 3)
(set-parameter (polybox b) 2)
```

Declare O.K.-assumptions (ATMS):

```
(assume-constraint-OK m1)
(assume-constraint-OK m2)

...
```


©STEIN 2023

Remarks:

- Operationalization of the diagnosis setting and the ATMS using the bps–implementation (in LISP) of Ken Forbus and Johan de Kleer, available via the Qualitative Reasoning Group web page of Ken Forbus.

©STEIN 2023

Diagnosis with the GDE

Polybox Example + ATMS (continued)

Interplay between the user, the inference engine, and the ATMS:

1. The user describes his inputs and observations.
2. The inference engine processes the constraint network.
3. For each value the inference engine computes, the ATMS creates a justificationa and a justified node.

©STEIN 2023

Diagnosis with the GDE

Polybox Example + ATMS (continued)

Interplay between the user, the inference engine, and the ATMS:

1. The user describes his inputs and observations.
2. The inference engine processes the constraint network.
3. For each value the inference engine computes, the ATMS creates a justificationa and a justified node.

User. Set $A = 3, B = 2, C = 2$. Assume that all components are O.K.

➜ ATMS. Create premise nodes for A, B, and C.

©STEIN 2023

Diagnosis with the GDE

Polybox Example + ATMS (continued)

Interplay between the user, the inference engine, and the ATMS:

1. The user describes his inputs and observations.
2. The inference engine processes the constraint network.
3. For each value the inference engine computes, the ATMS creates a justificationa and a justified node.

User. Set $A = 3, B = 2, C = 2$. Assume that all components are O.K.

➜ ATMS. Create premise nodes for A, B, and C.

Inference Engine. Applicable multiplier rule of $M1$ gives $X = 6$.

➜ ATMS. Create justification for X. Syntax:

$$\langle \quad \underbrace{\texttt{X=6,}}_{\text{Consequent}} \quad \underbrace{\texttt{C-PROPAGATION,}}_{\text{Informant}} \quad \underbrace{\texttt{\{A=3, C=2, M1=O.K.\}}}_{\text{Antecedents}} \quad \rangle$$

©STEIN 2023

Diagnosis with the GDE

Polybox Example + ATMS (continued)

Interplay between the user, the inference engine, and the ATMS:

1. The user describes his inputs and observations.
2. The inference engine processes the constraint network.
3. For each value the inference engine computes, the ATMS creates a justificationa and a justified node.

User. Set $A = 3, B = 2, C = 2$. Assume that all components are O.K.

➜ ATMS. Create premise nodes for A, B, and C.

Inference Engine. Applicable multiplier rule of $M1$ gives $X = 6$.

➜ ATMS. Create justification for X. Syntax:

$$\langle \quad \underbrace{\texttt{X=6,}}_{\text{Consequent}} \quad \underbrace{\texttt{C-PROPAGATION,}}_{\text{Informant}} \quad \underbrace{\{\texttt{A=3, C=2, M1=O.K.}\}}_{\text{Antecedents}} \quad \rangle$$

➜ ATMS. Create justified node for X. Syntax: $< \texttt{X=6}, \{\{M1\}\} >$

©STEIN 2023

Diagnosis with the GDE

Polybox Example + ATMS (continued)

User	Inference engine	ATMS
M1=OK, M2=OK, M3=OK, A1=OK, A2=OK		
A=3		*<A=3, {{ }}>*
B=2		*<B=2, {{ }}>*
C=2	X=A*C	*<C=2, {{ }}>*
		<X=6, {{M1}}>
D=3	...	...

Time

ATMS semantics (example): If X holds in environment $\{M1\}$ then $\{M1\}$ means that "$M1$ is O.K."

©STEIN 2023

Diagnosis with the GDE

Polybox Example + ATMS (continued)

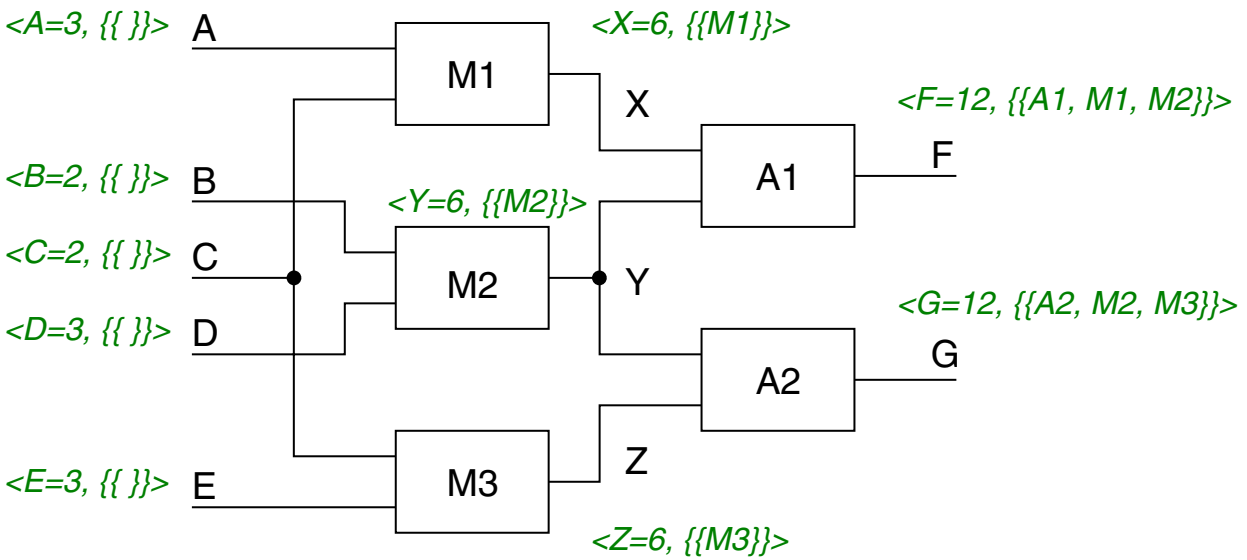

ATMS label database:

```
<A=3,  > <X=6, M1>
<B=2,  > <Y=6, M2>
<C=2,  > <Z=6, M3>
<D=3,  > <F=12, A1, M1, M2>
<E=3,  > <G=12, A2, M2, M3>
```


©STEIN 2023

Remarks:

- The ATMS label database lists every possible prediction that can be made from the user input and the component descriptions.
- Moreover, it shows the minimal set of working components required for each prediction.
- Recall that the environments in the ATMS labels are minimal.

© STEIN 2023

Diagnosis with the GDE

Polybox Example + ATMS (continued)

The constraint processing job of the inference engine:

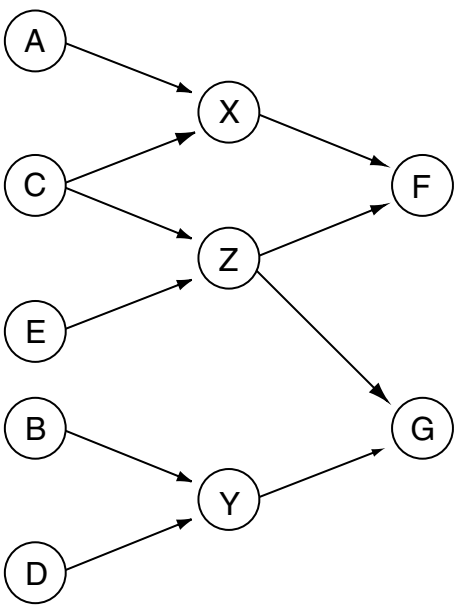

The maintenance job of the ATMS:

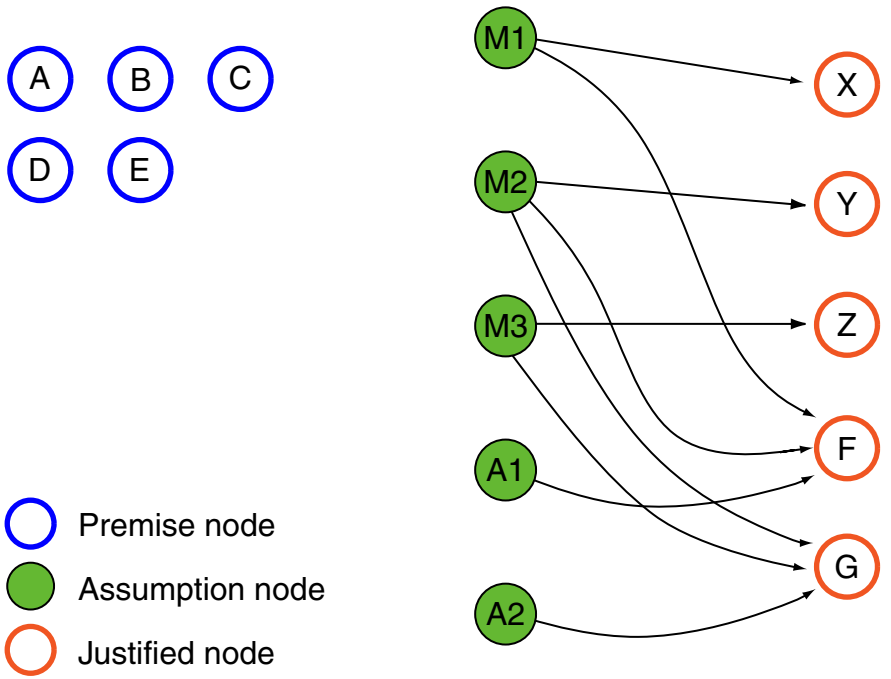

ATMS semantics (example): To compute X the component $M1$ must be O.K.

©STEIN 2023

Remarks:

- The ATMS maintains five environments in the shown situation: $\{M1\}$, $\{M2\}$, $\{M3\}$, $\{M1, M2, A1\}$, $\{M2, M3, A2\}$
- The ATMS forms an environment only, if some fact has been deduced from it, and if the environment is minimum.
- Note that up to 2^n environments are possible, where n denotes the number of assumption nodes stored in the ATMS.

©STEIN 2023

Diagnosis with the GDE

Polybox Example + ATMS (continued)

User. Observe $F = 10$.

- ➜ ATMS. The assumption set $\{A1, M1, M2\}$ leads to a contradiction: $F = 12$ and $F = 10$.
- ➜ ATMS. The environment $\{A1, M1, M2\}$ forms a nogood set.

©STEIN 2023

Diagnosis with the GDE

Polybox Example + ATMS (continued)

User. Observe $F = 10$.

- ➜ ATMS. The assumption set $\{A1, M1, M2\}$ leads to a contradiction: $F = 12$ and $F = 10$.
- ➜ ATMS. The environment $\{A1, M1, M2\}$ forms a nogood set.

In detail:

1. ATMS. Introduce premise node $< \texttt{F=10}, \{\{\}\} >$.
2. ATMS. Detection of a nogood set.
3. ATMS. Remove nogood set $\{A1, M1, M2\}$ from labels.
4. ATMS. Delete unjustified nodes, i. e., nodes with empty labels:
   Deletion of $< \texttt{F=12}, \{\} >$ which formerly was $< \texttt{F=12}, \{\{A1, M1, M2\}\} >$
5. Inference Engine. New simulation of the polybox by evaluating its constraints:
   $(A1$=O.K. $\wedge\ M2$=O.K.$) \rightarrow (X = 4)$
   $(A1$=O.K. $\wedge\ M1$=O.K.$) \rightarrow (Y = 4)$
   $(A1$=O.K. $\wedge\ A2$=O.K. $\wedge\ M1$=O.K. $\wedge\ M3$=O.K.$) \rightarrow (G = 10)$
6. ATMS. Introduce the respective nodes and justifications, e. g.:
   Node: $< \texttt{Y=4}, \{\{A1, M1\}\} >$
   Justification: $\langle$`Y=4`, `C-PROPAGATION`, {`X=6, F=10, M1=O.K., A1=O.K.`}$\rangle$

©STEIN 2023

Remarks:

- There is a one-to-one correspondence between ATMS nogood sets mentioning only O.K.-assumptions and conflicts.
- Note that the simulation, say the inference engine deductions, must not be purely causal: An adder's output cannot constrain its inputs.

©STEIN 2023

Diagnosis with the GDE

Polybox Example + ATMS (continued)

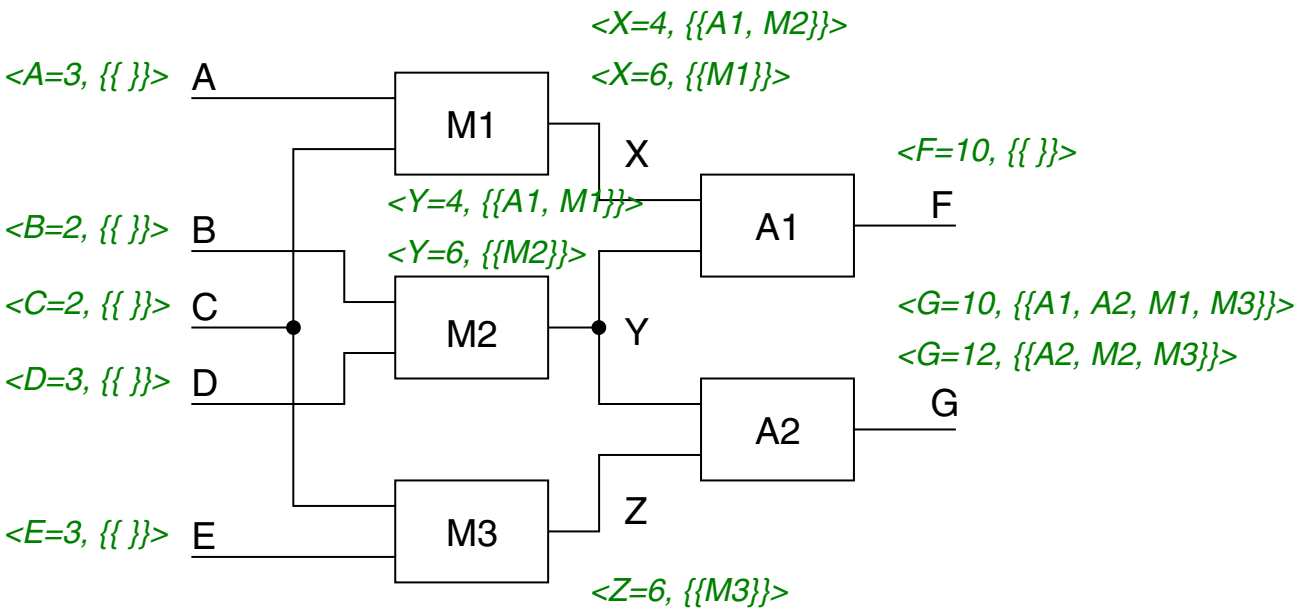

ATMS label database before any observation:

```
<A=3,  > <X=6, M1>
<B=2,  > <Y=6, M2>
<C=2,  > <Z=6, M3>
<D=3,  > <F=12, A1, M1, M2>
<E=3,  > <G=12, A2, M2, M3>
```


© STEIN 2023

Diagnosis with the GDE

Polybox Example + ATMS (continued)

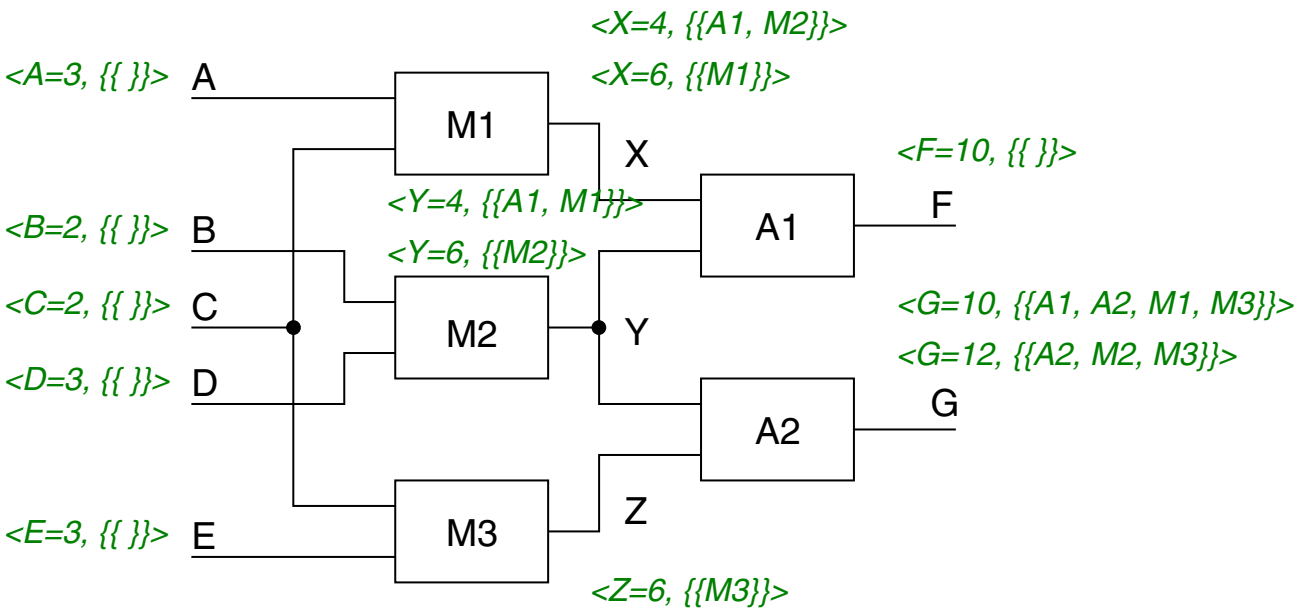

Update of the ATMS label database after the observation $F = 10$:

```
- <F=12, {{A1, M1, M2}}      + <F=10, {{}}>
                             + <X=4, {{A1, M2}}>
                             + <Y=4, {{A1, M1}}>
                             + <G=10, {{A1, A2, M1, M3}}>
                             + <⊥, {A1, M1, M2}>
```


©STEIN 2023

Diagnosis with the GDE

Polybox Example + ATMS (continued)

User. Observe $G = 12$.

- ➜ ATMS. The assumption set $\{A1, A2, M1, M3\}$ leads to a contradiction: $G = 12$ and $G = 10$
- ➜ ATMS. The environment $\{A1, A2, M1, M3\}$ forms a nogood set.

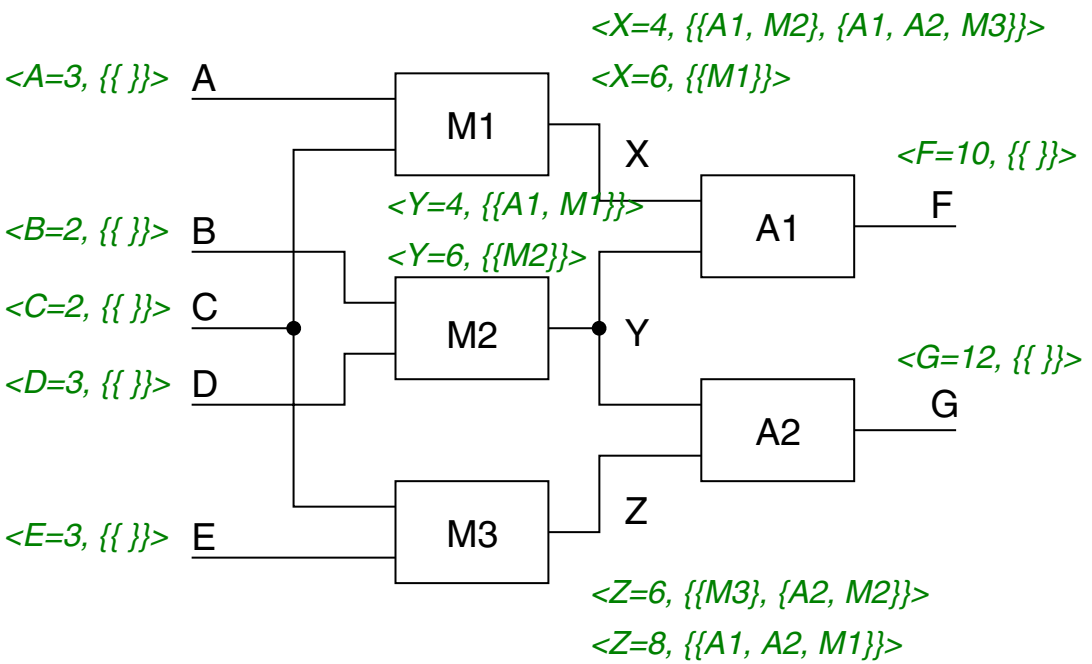

©STEIN 2023

Diagnosis with the GDE

Polybox Example + ATMS (continued)

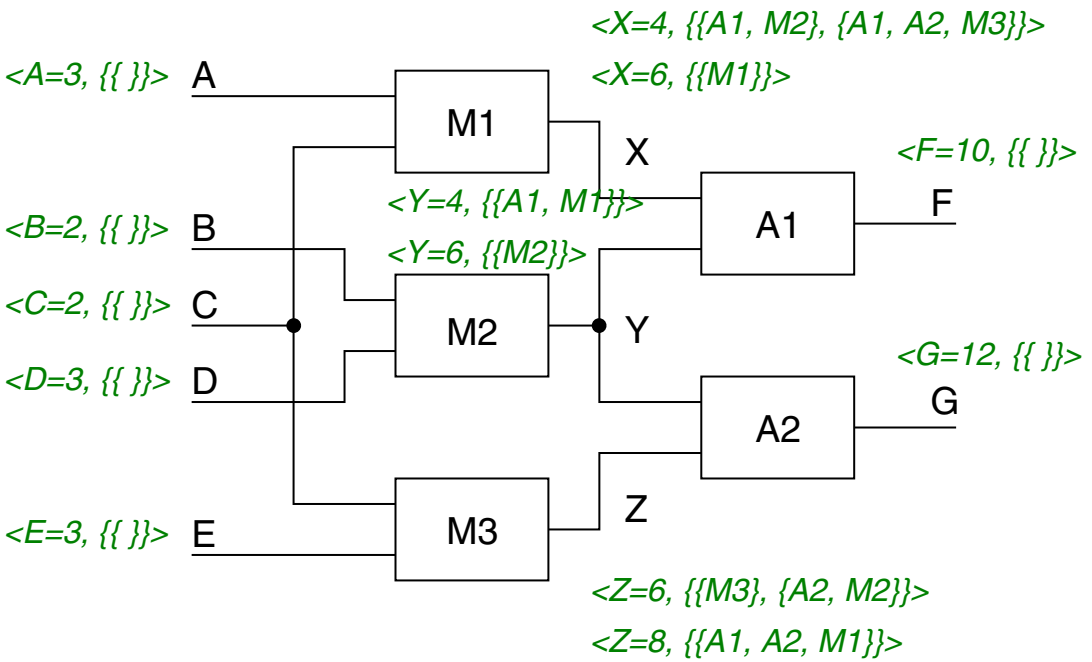

Update of the ATMS label database after the observation $G = 12$:

```
- <G=12, {{A2, M2, M3}}          + <G=12, {{}}>
- <G=10, {{A1, A2, M1, M3}}      + <X=4, {{A1, M2}, {A1, A2, M3}}>
                                 + <Y=6, {{M2}, {A2, M3}}>
                                 + <Z=6, {{M3}, {A2, M2}}>
                                 + <Z=8, {{A1, A2, M1}}>
                                 + <⊥, {A1, A2, M1, M3}>
```


©STEIN 2023

Diagnosis with the GDE

Minimal Diagnoses

Recapitulation:

- A diagnosis is a set of components that covers all conflicts. I. e., it must contain at least one component from every conflict.
- A diagnosis that contains no diagnosis as its subset is called a minimal diagnosis.
- If the intersection $D_{\mathcal{C}}$ of all conflicts is not empty, each element in $D_{\mathcal{C}}$ constitutes a minimal diagnosis.
- A diagnosis that is a singleton is called a single fault diagnosis.

In the polybox example:

- There are two conflicts $\{A1, M1, M2\}$ and $\{A1, A2, M1, M3\}$.
  ➜ Two single fault diagnoses $\{A1\}$ and $\{M1\}$.
- A multiple fault diagnosis is $\{M2, M3\}$.

©STEIN 2023

Remarks:

- A multiple fault diagnosis may not be composed out of combinations of single fault diagnoses. However, it can be.
- Question: How can all diagnoses be constructed?

©STEIN 2023

Diagnosis with the GDE

Minimal Diagnoses (continued)

Generic diagnoses lattice of the polybox example:

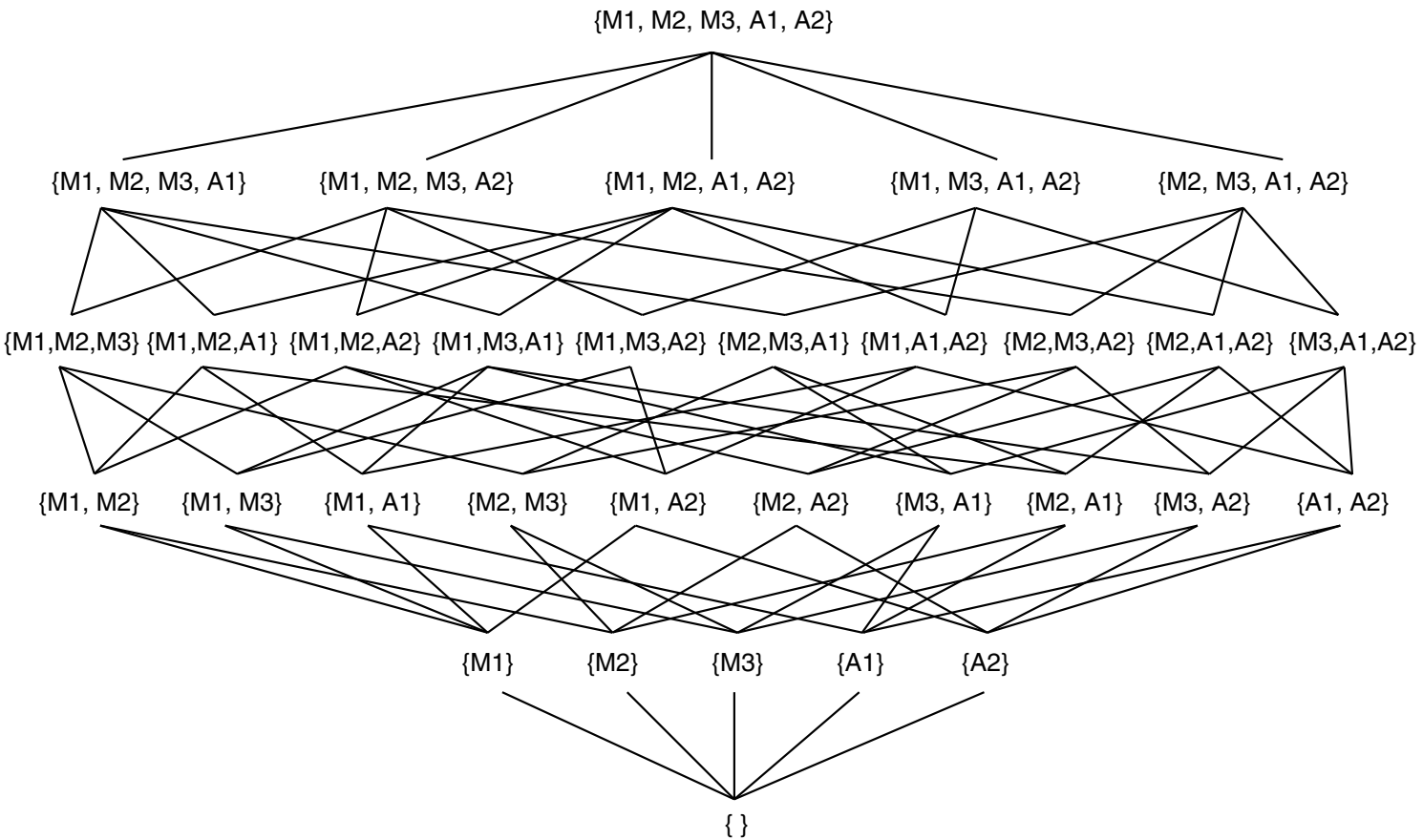

© STEIN 2023

Remarks:

- Bottom of the lattice: Diagnosis in which nothing is faulted.
- Top of the lattice: Diagnosis where all components are faulted.

©STEIN 2023

Diagnosis with the GDE

Minimal Diagnoses (continued)

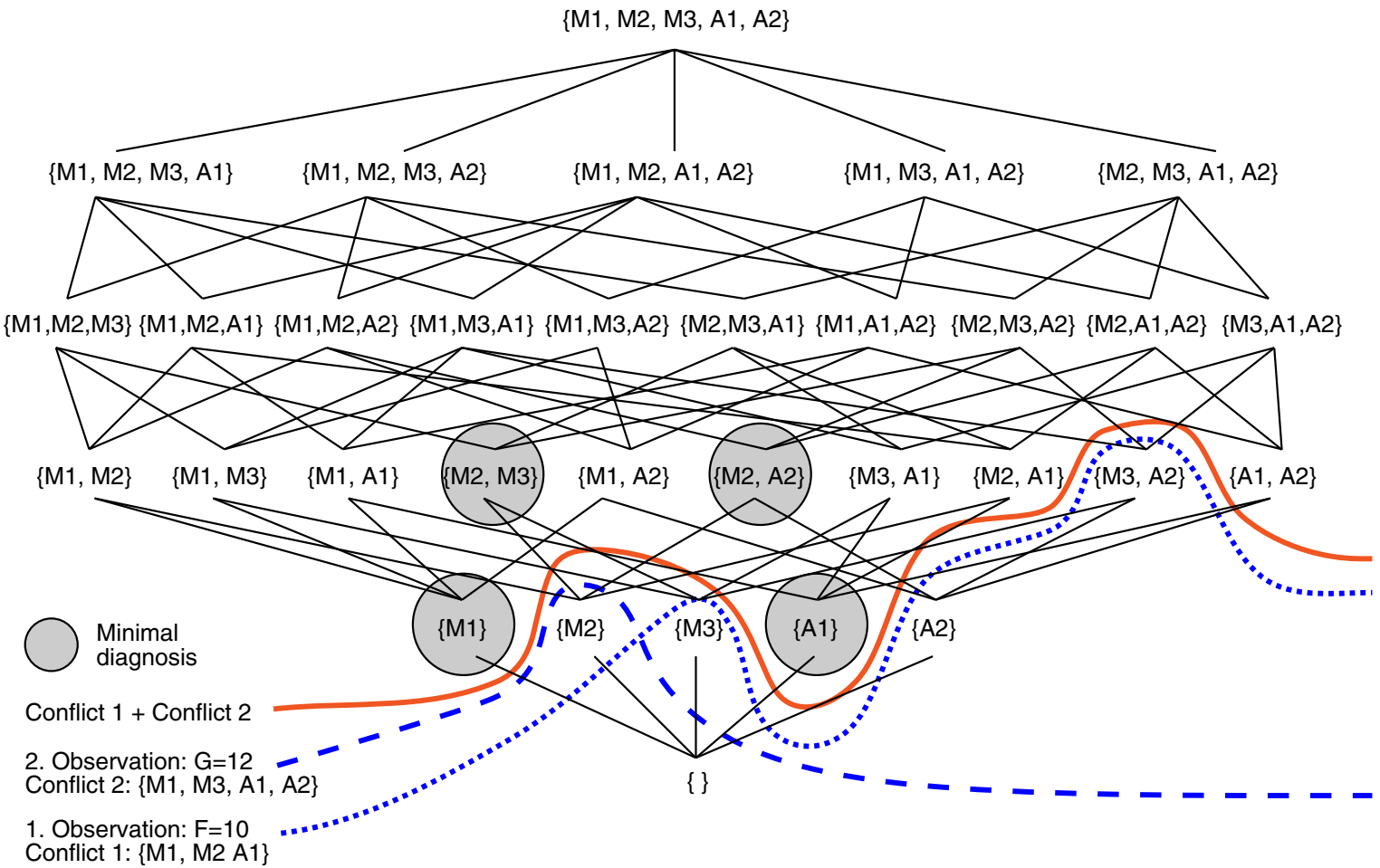

© STEIN 2023

Remarks:

- Initially, the only conflict set is the empty set.
  - ➜ Every set in the lattice is a diagnosis.
- Going upward in the lattice means that more components are faulted.
  - ➜ Each conflict defines a line through the lattice which rules out all diagnoses below.
- Minimal diagnoses contain no other diagnoses as subsets.
  - ➜ Minimal diagnoses occur immediately above all those eliminated by the conflicts.
- To construct a minimal diagnosis a set-covering problem must be solved, which is NP-hard.
- A simple algorithm is a backtrack search: Successively select one component from each conflict until all conflicts are covered.

©STEIN 2023

Diagnosis with the GDE

Measurement Selection

> "If every device quantity were observable and measurements were free, the best diagnostic strategy would be to measure everything."
>
> [deKleer/Forbus 1987-1993]

Strategy of hypothetical measurements:

1. Hypothesize each possible result (outcome).
2. Analyze how the observation of a particular result reduces the number of remaining diagnosis.

©STEIN 2023

Diagnosis with the GDE

Measurement Selection (continued)

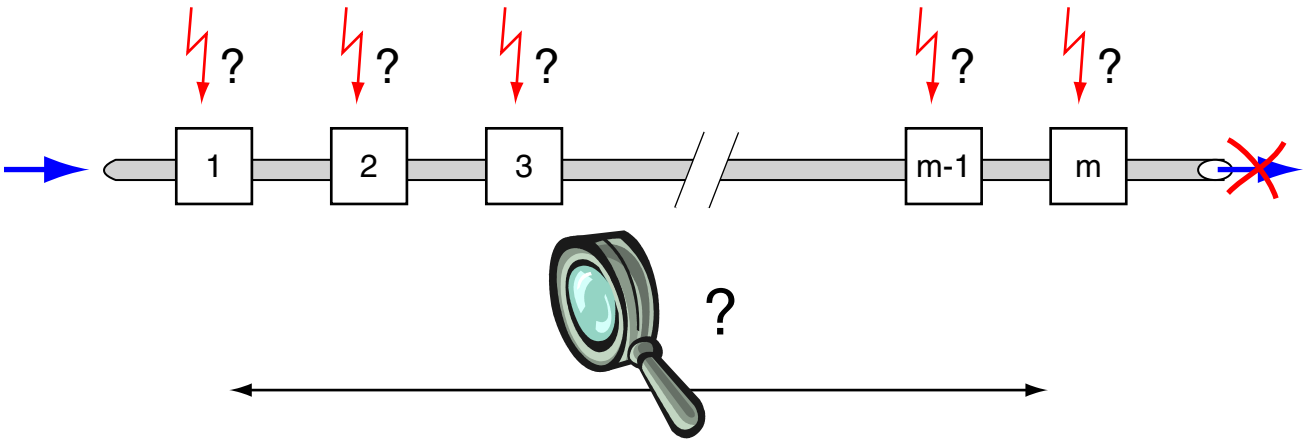

Underlying determinants:

- Total number of diagnosis: n
- Possible measurement results of quantity (variable) M: R_M
- Number of possible measurement results for M: $k = |R_M|$
- Particular measurement result for some M: $r,\ r \in R_M$
- Number of diagnoses that predict (comply with) result r: n_r

©STEIN 2023

Diagnosis with the GDE

Measurement Selection (continued)

From the ATMS label database in the polybox example:

```
<Z=6, {{M3}, {A2, M2}}>
<Z=8, {{A1, A2, M1}}>
```

Discussion:

- Z=8 follows under the assumption that $A1, A2$ and $M1$ are O.K.
- Conversely this means that Z=8 complies with the diagnosis $\{M2, M3\}$.
  In the polybox example $\{M2, M3\}$ is the only diagnosis Z=8 complies with.

➜ $M_Z = \{6; 8\}$, $k = 2$, $r = 8$.
Moreover, for the result, $r = 8$, the number of diagnosis, n_r, is 1.

©STEIN 2023

Diagnosis with the GDE

Measurement Selection (continued)

What can happen if we measure Z:

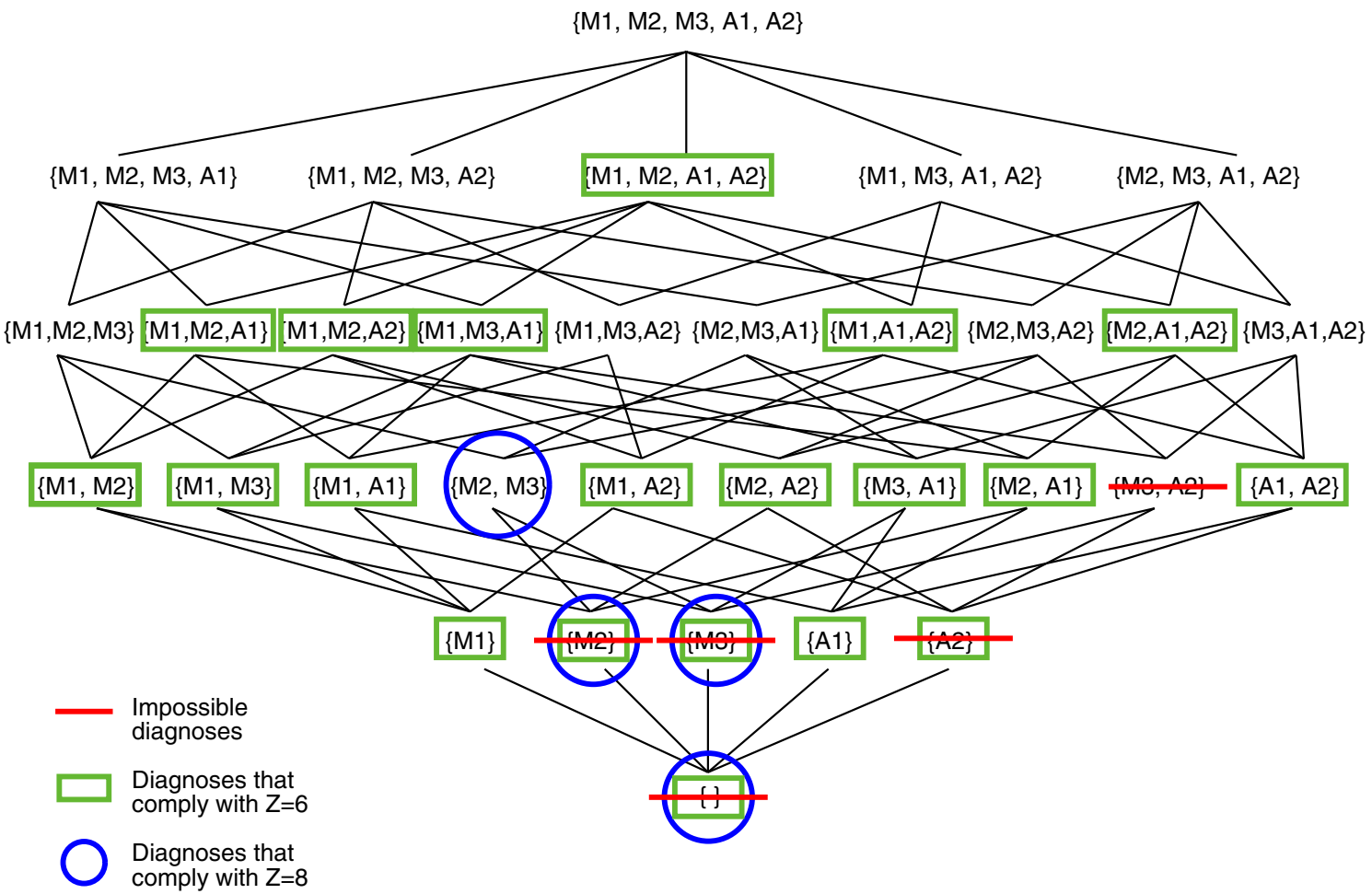

©STEIN 2023

Diagnosis with the GDE

Measurement Selection (continued)

Information-theoretical considerations:

- The smallest number of measurements required to discriminate among n diagnoses is $\lceil \log_k n \rceil$.
- Measuring a quantity M can be scored by $\mu(M)$, the expected number of measurements that remain to be done after M has been measured:

$$\mu(M) = \sum_{r \in R_M} \frac{n_r}{n} \cdot \log_k n_r$$

- Select that quantity M whose value $\mu(M)$ is mininum with respect to all quantities in question.

In the polybox example for $M = Z$:

- The number of possible diagnoses, n, is 26.
- For quantity Z, $R_Z = \{6; 8\}$, $k = 2$, $r_6 = 15$ and $r_8 = 1$.
- $\mu(Z) = \frac{15}{26} \cdot \log_2 15 + \frac{1}{26} \cdot \log_2 1 \approx 2.3$

©STEIN 2023

Remarks:

- Simplifying assumptions of the presented strategy:
  1. All diagnoses are considered to be equally likely.
  2. The cost of every measurement is equal.
  3. Only minimum cardinality diagnoses are searched.

©STEIN 2023

Chapter MK:V

V. Diagnoseansätze

©STEIN 2023

Diagnosis with Reiter

Diagnosis from First Principles

Under the name “Diagnosis from First Principles” Reiter introduced a model-based diagnosis approach. Concepts:

- Functional system description must be known.
- System description and diagnosis problem formulation in the first order predicate calculus (PLI).
- Determination of defect components by a theorem prover.

Definition 17 (System [according to Reiter]**)**

A system is a triple $\langle SD, COMPS, OBS \rangle$ where

1. SD, the system description, is a set of first-order formulas.
2. $COMPS$, the system components, is a finite set of constants.
3. OBS, a set of observations, is a set of first-order formulas.

©STEIN 2023

Remarks:

- SD defines the behavior of the components and the structure of the system.
- For each component its behavior is defined by logical relations between the component's input and output.
- These relations contain a special predicate $AB(x)$, which means "x behaves abnormally".
- To describe the O.K.-behavior of a component c, the term $\neg AB(c)$ must be part of a component description.

©STEIN 2023

Diagnosis with Reiter

Diagnosis from First Principles (continued)

Definition 18 (Conflict Set [according to Reiter]**)**

A set $C := \{c_1, \ldots, c_k\} \subseteq COMPS$ is called a conflict set, if

$$SD \cup OBS \cup \{\neg AB(c_1), \ldots, \neg AB(c_k)\}$$

is contradictory. A conflict set C is minimum, if no subset of C establishes a conflict set.

Definition 19 (Diagnosis [according to Reiter]**)**

A set $\Delta \subseteq COMPS$ is called a diagnosis respecting $\langle SD, COMPS, OBS\rangle$ if and only if

1. Δ is minimal, and
2. $COMPS \setminus \Delta$ forms no conflict set respecting $\langle SD, COMPS, OBS\rangle$.

©STEIN 2023

Remarks:

- A conflict set must contain at least one faulty component.

©STEIN 2023

Diagnosis with Reiter

Example

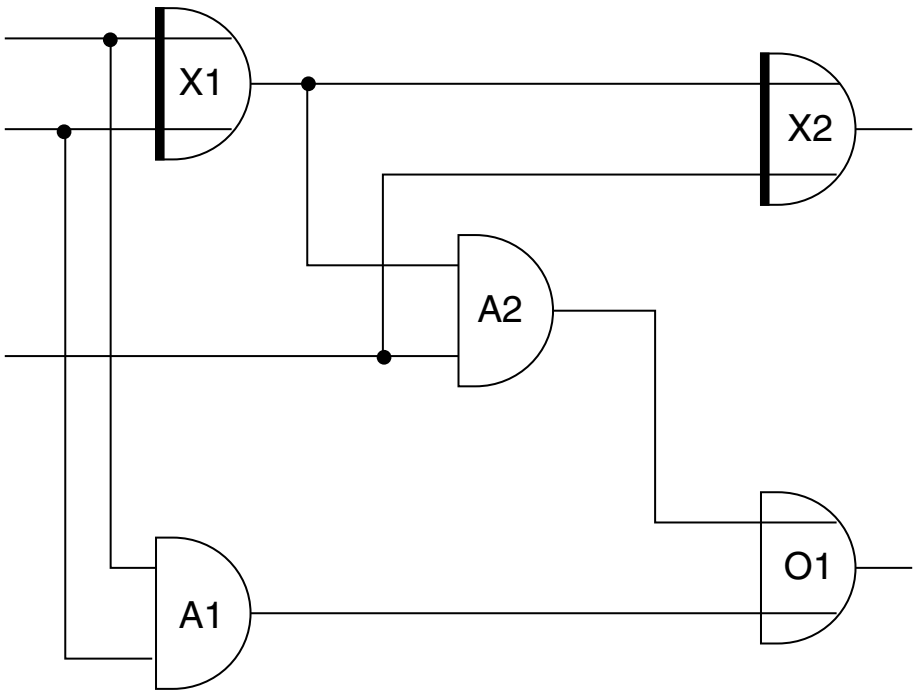

© STEIN 2023

Diagnosis with Reiter

Example (continued)

Boolean algebra axioms:

$$
\begin{aligned}
SD = \{ \quad & \mathit{ANDG}(x) \wedge \neg \mathsf{AB}(x) \rightarrow out(x) = and(in1(x), in2(x)), \\
& \mathit{XORG}(x) \wedge \neg \mathsf{AB}(x) \rightarrow out(x) = xor(in1(x), in2(x)), \\
& \mathit{ORG}(x) \wedge \neg \mathsf{AB}(x) \rightarrow out(x) = or(in1(x), in2(x)), \\
& \mathit{ANDG}(A_1), \mathit{ANDG}(A_2), \mathit{XORG}(X_1), \mathit{XORG}(X_2), \mathit{ORG}(O_1), \\
& out(X_1) = in1(A_2), \\
& out(X_1) = in1(X_2), \\
& out(A_2) = in1(O_1), \\
& in2(A_2) = in2(X_2), \\
& in1(X_1) = in1(A_1), \\
& in2(X_1) = in2(A_1), \\
& out(A_1) = in2(O_1), \\
& in1(X_1) = 0 \vee in1(X_1) = 1, \\
& in2(X_1) = 0 \vee in2(X_1) = 1, \\
& in2(A_2) = 0 \vee in2(A_2) = 1 \quad \}
\end{aligned}
$$

Observations:

$$OBS = \{ \; in1(X_1) = 1, in2(X_1) = 0, in1(A_2) = 1, out(X_2) = 1, out(O_1) = 0 \; \}$$

©STEIN 2023

Diagnosis with Reiter

Diagnosis from First Principles (continued)

A correctly working system is defined as follows:

$$\alpha := SD \cup \{\neg AB(c) \mid c \in COMPS\}$$

The system α is faulty.

$\Leftrightarrow$ The observations do not correspond to the system description.

$\Leftrightarrow$ $\alpha \cup OBS$ is contradictory.

Determining a diagnosis:

- Retract some of the assumptions $\neg AB(c_1), \ldots, \neg AB(c_n)$ to make the above formula consistent.

➜ Find a set $\Delta \subseteq COMPS$ such that the following formula is consistent:

$$SD \cup OBS \cup \{AB(c) \mid c \in \Delta\} \cup \{\neg AB(c) \mid c \in COMPS \setminus \Delta\}$$

©STEIN 2023

Remarks:

- Retracting all assumptions will always work, but is not very useful.
- Δ is minimal $\Leftrightarrow$ no subset of Δ forms a diagnosis.
- There are three diagnoses in the example: $\{X_1\}, \{X_2, O_1\}, \{X_2, A_2\}$

©STEIN 2023

Diagnosis with Reiter

Diagnosis from First Principles (continued)

Definition 20 (Hitting Set)

Let $\mathcal{C}$ be a set of conflict sets. Then $H \subseteq COMPS$ is called a hitting set, if the following holds:

$$\forall_{C \in \mathcal{C}} : C \cap H \neq \emptyset$$

A hitting set H is minimum, if no subset of H establishes a hitting set.

©STEIN 2023

Diagnosis with Reiter

Diagnosis from First Principles (continued)

Definition 20 (Hitting Set)

Let $\mathcal{C}$ be a set of conflict sets. Then $H \subseteq COMPS$ is called a hitting set, if the following holds:

$$\forall_{C \in \mathcal{C}} : C \cap H \neq \emptyset$$

A hitting set H is minimum, if no subset of H establishes a hitting set.

In the Boolean algebra example:

- There are two minimum conflict sets, $\{X_1, X_2\}, \{X_1, A_2, O_1\}$, which correspond to the inconsistency of the following formulas:

  $$SD \cup \text{OBS} \cup \{\neg AB(X_1), \neg AB(X_2)\}$$

  and

  $$SD \cup \text{OBS} \cup \{\neg AB(X_1), \neg AB(A_2), \neg AB(O_1)\}$$

- Based on these conflict sets, the following diagnoses can be constructed:

  $$\{X_1\}, \{X_2, O_1\}, \{X_2, A_2\}$$

©STEIN 2023

Remarks:

- Each diagnosis Δ for $\langle SD, COMPS, OBS \rangle$ establishes a minimum hitting set respecting the sets of minimum conflicts.
- Reiter generates all minimum hitting sets by a breadth-first search within a particular data structure, called “HS-tree”.
- Constructing a HS-tree requires the determination of all minimum conflict sets. This is realized by a theorem prover that proves the inconsistency of the following formula:

$$SD \cup OBS \cup \{\neg AB(c) \mid c \in COMPS\}$$

©STEIN 2023